RCXb = Room climate controller
LCXb = Lab climate controller
CBX = Connection box TTC, VTD
CBD = Connection box ISQ/ISQ-F/ISQ-V2/ICI
DCV-RCb = Room climate control unit
DCV-LCb = Lab climate control unit

Signal:
GQ: 2-10V (400-2000 ppm)
GT: 0-10V (12-43°C)
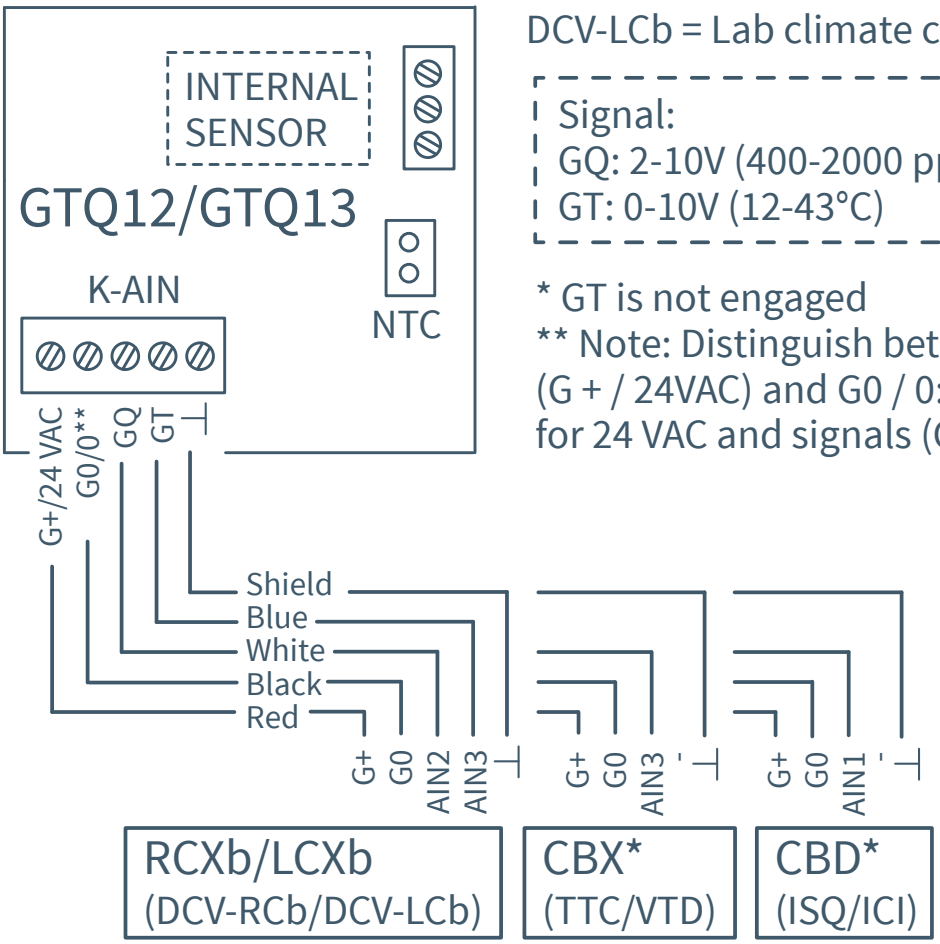
* GT is not engaged
** Note: Distinguish between phase (G + / 24VAC) and G0 / 0: Common zero for 24 VAC and signals (GQ, GT).