GT-S - RADIATOR TEMPERATURE SENSOR UNIT

Version A01

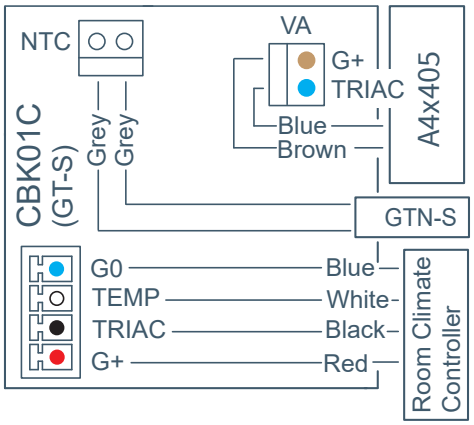

GTN-S: Magnetically attachable temperature sensor
A4x405 = Valve actuator, 24VAC (On/Off)
RCXb (DCV-RCb): Room Climate Controller
LCXb (DCV-LCb): Lab Climate Controller
BCXb (DCV-B): Chilled Beam Controller
ISQ/-F/-V2, ICI-F: Active diffusers

Follow the stated, non standard, conductor color!

- BLACK is to be used for TRIAC
- BLUE is to be used for G0

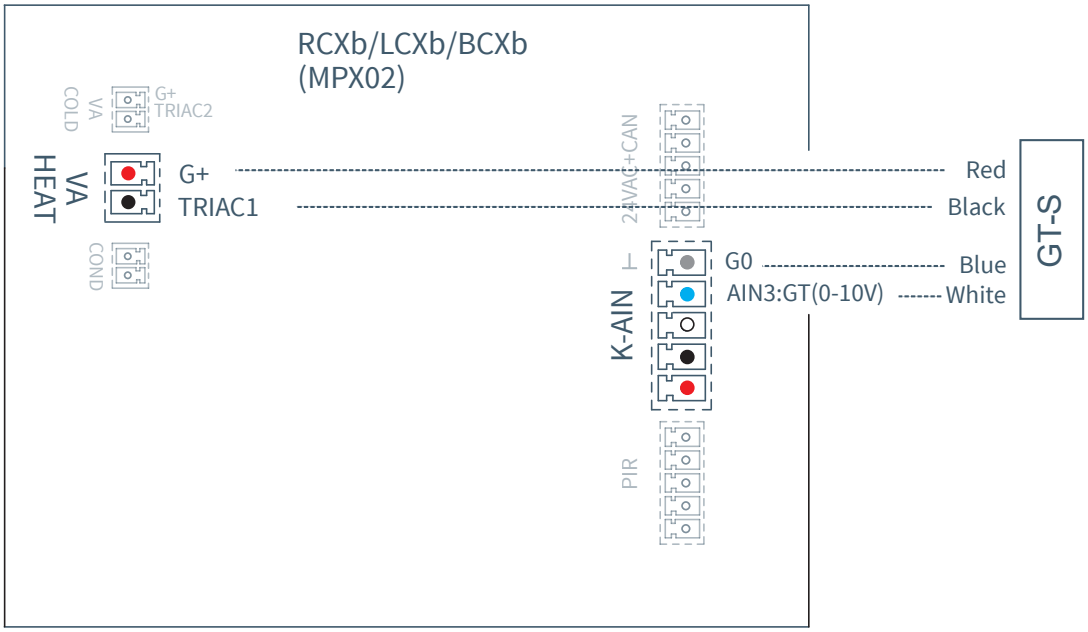

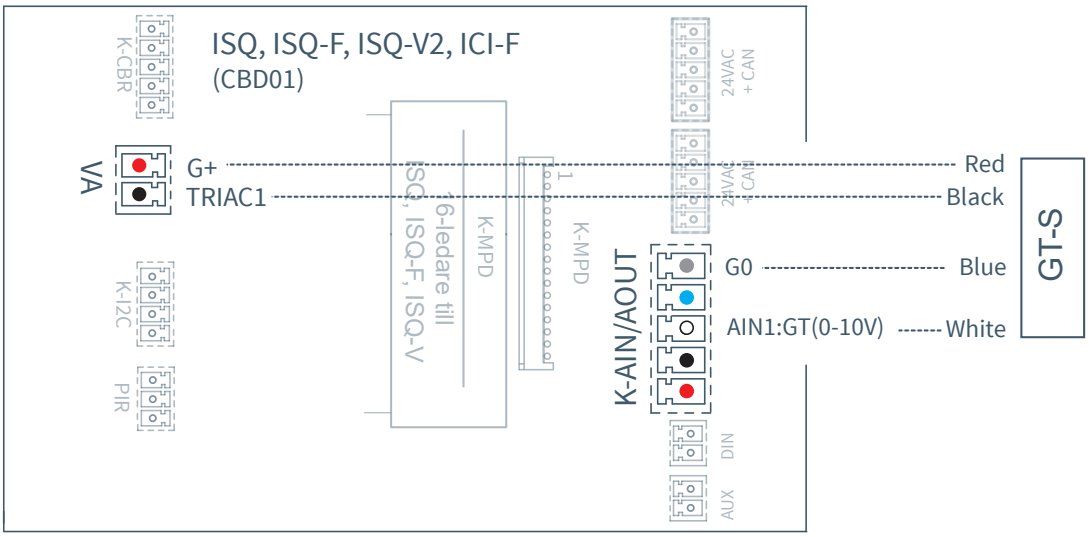

LINDINVENT